TSH511

Hi-fi stereo/mono infrared receiver and stereo sub-carrier demodulator

Features

- Supply voltage: 2.3V to 5.5V
- Carriers frequency range: 0.4MHz to 11MHz
- Two FM receivers for stereo
- Integrated audio buffers
- Audio outputs: 20mW into 16 ohms
- High sensitivity: 4µV @12dB SINAD
- Flexibility: access pins for each section
- Receiver 2 Standby for mono operation

Applications

- Infrared hi-fi stereo receiver
- Infrared multimedia headsets
- Stereo sub-carrier demodulator
- FM IF receiver systems
- Power line carrier intercoms

Description

The TSH511 is a 0.4 to 11MHz dual FM receiver. This circuit offers the functions needed for a highly sensitive infrared hi-fi stereo receiver.

Featuring high input sensitivity and high input dynamic range, each receiver integrates an RF front-end LNA, an intermediate amplifier with 2 external filters, a voltage limiter, a quadrature FM demodulator, and finally an audio buffer.

The integrated audio buffers are able to directly drive a 16-ohm headphone with 20mW. A squelch circuit mutes both audio amplifiers.

Access pins to each section makes the TSH511 suited for a wide field of applications.

For mono applications, the standby pin enables one receiver only, reducing the supply current.

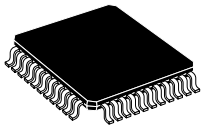

F
TQFP44
10 x 10 mm

Pin connections
(top view)

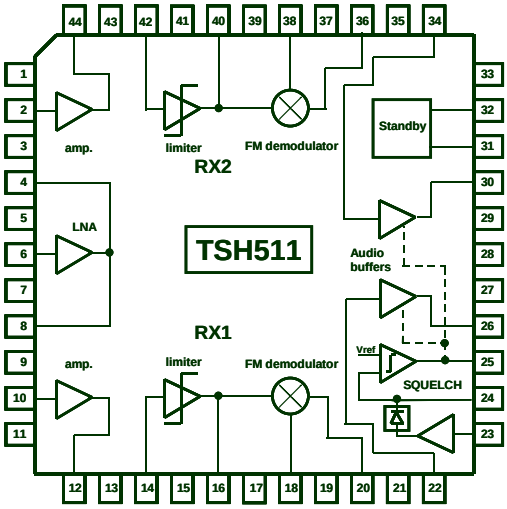

The TSH511 forms a chipset with the dual transmitter TSH512.

Contents

1 Block diagram 3

2 Absolute maximum ratings 5

3 Electrical characteristics 6

4 Overall circuit performance 9

5 Audio buffer performance 10

6 Typical application schematics 13

7 Application information 14

7.1 Infrared stereo headphone application 14

7.2 Multimedia application 15

Headset side 15

Computer side 16

8 General description 17

8.1 LNA section: low noise amplifier 18

8.2 AMP and LIM sections: amplifier and limiter 19

8.3 FM demodulator section 19

8.4 Squelch section 20

8.5 Audio buffer sections 21

8.6 Standby section 22

9 Package information 22

10 Ordering information 24

11 Revision history 24

1 Block diagram

Figure 1. Block diagram

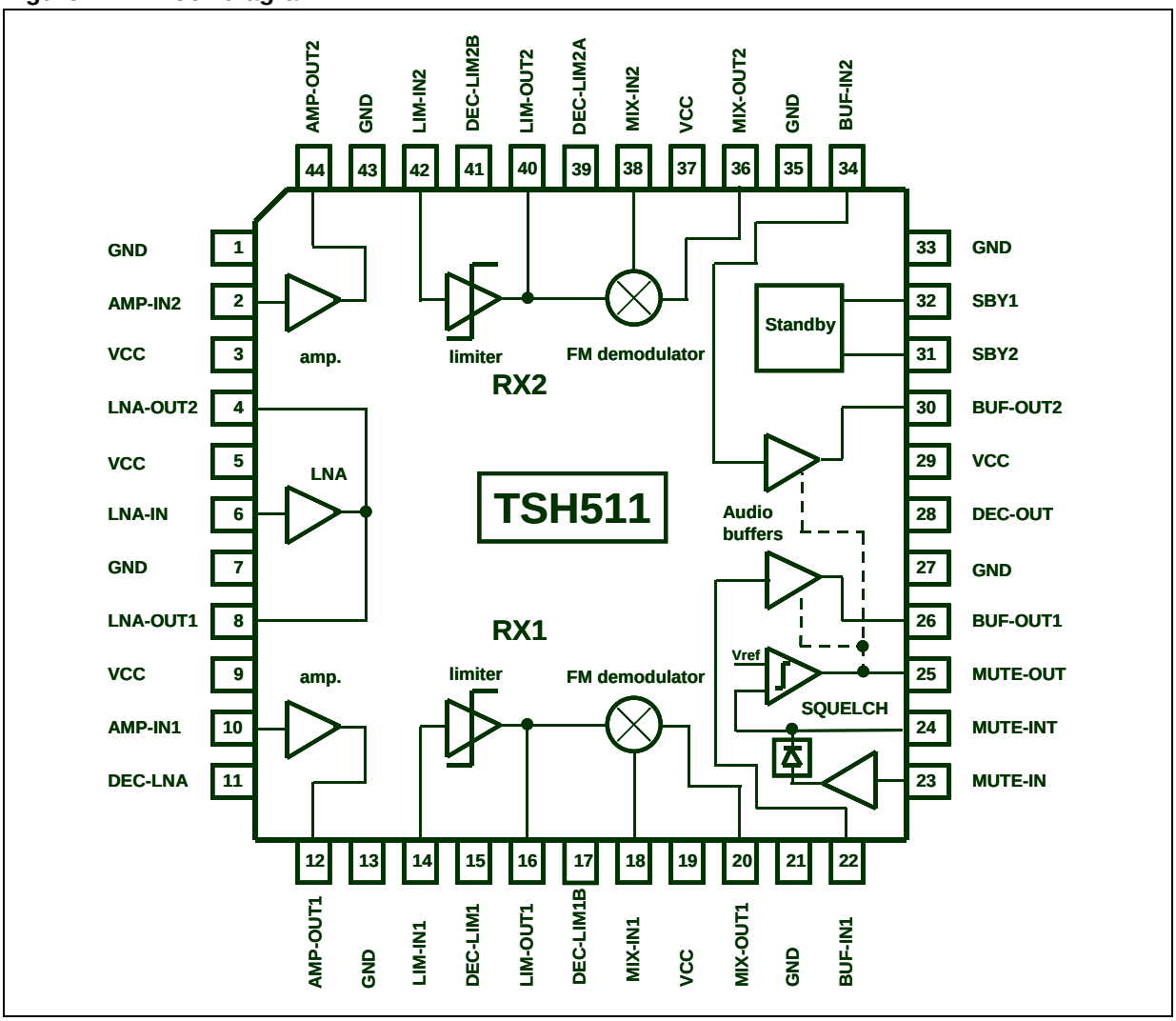

Table 1. Pin descriptions

Pin	Pin name	Related to	Direction(1)	Pin description
1	GND	-	-	GROUND
2	AMP-IN2	RX2	I	Intermediate amplifier input
3	VCC	-	-	SUPPLY VOLTAGE
4	LNA-OUT2	RX2	O	Low Noise Amplifier output
5	VCC	-	-	SUPPLY VOLTAGE
6	LNA-IN	RX1 & RX2	I	Low Noise Amplifier input
7	GND	-	-	GROUND
8	LNA-OUT1	RX1	O	Low Noise Amplifier output
9	VCC	-	-	SUPPLY VOLTAGE

Table 1. Pin descriptions

Pin	Pin name	Related to	Direction[1]	Pin description
10	AMP-IN1	RX1	I	Intermediate amplifier input
11	DEC-LNA	RX1 & RX2	-	Decoupling capacitor
12	AMP-OUT1	RX1	O	Intermediate amplifier input
13	GND	-	-	GROUND
14	LIM-IN1	RX1	I	Limiter input
15	DEC-LIM1A	RX1	-	Decoupling capacitor
16	LIM-OUT1	RX1	O	Limiter output
17	DEC-LIM1B	RX1	-	Decoupling capacitor
18	MIX-IN1	RX1	I	Mixer input
19	VCC	-	-	SUPPLY VOLTAGE
20	MIX-OUT1	RX1	O	Mixer output (demodulated audio signal)
21	GND	-	-	GROUND
22	BUF-IN1	RX1	I	Audio buffer input
23	MUTE-IN	RX1 & RX2	I	Noise amplifier input (Squelch circuit)
24	MUTE-INT	RX1 & RX2	-	Capacitor connection of the noise rectifier
25	MUTE-OUT	RX1 & RX2	O	Capacitor connection (ramp generator to mute the audio)
26	BUF-OUT1	RX1	O	Audio buffer output
27	GND	-	-	GROUND
28	DEC-OUT	RX1 & RX2	-	Decoupling capacitor of Audio buffers
29	VCC	-	-	SUPPLY VOLTAGE
30	BUF-OUT2	RX2	O	Audio buffer output
31	SBY2	RX1 & RX2	I	Standby 2
32	SBY1	RX1 & RX2	I	Standby 1
33	GND	-	-	GROUND
34	BUF-IN2	RX2	I	Audio buffer input
35	GND	-	-	GROUND
36	MIX-OUT2	RX2	O	Mixer output
37	VCC	-	-	SUPPLY VOLTAGE
38	MIX-IN2	RX2	I	Mixer input
39	DEC-LIM2A	RX2	-	Decoupling capacitor
40	LIM-OUT2	RX2	O	Limiter output
41	DEC-LIM2B	RX2	-	Decoupling capacitor
42	LIM-IN2	RX2	I	Limiter input
43	GND	-	-	GROUND
44	AMP-OUT2	RX2	O	Intermediate amplifier output

1. Pin direction: I = input pin, O = output pin, - = pin to connect to supply or decoupling capacitors or external components.

2 Absolute maximum ratings

Table 2. Absolute maximum ratings

Symbol	Parameter	Value	Unit
V_{CC}	Supply voltage(1)	7	V
T_{oper}	Operating free air temperature range	-40 to +85	°C
T_{stg}	Storage temperature	-65 to +150	°C
T_j	Maximum junction temperature	150	°C
R_{thjc}	Thermal resistance junction to case	14	°C/W
R_{thja}	Thermal resistance junction to ambient area	45	°C/W
ESD except for pin 6	HBM: human body model(2) CDM: charged device model(3) MM: machine model(4)	2 1.5 0.2	kV
ESD only for pin 6	HBM: human body model CDM: charged device model MM: machine model	1 1 0.1	kV
Latch-up	Class(5)	A	

1. All voltage values, except differential voltage, are with respect to network ground terminal.
2. Electrostatic discharge pulse (ESD pulse) simulating a human body discharge of 100pF through 1.5kΩ
3. Discharge to ground of a device that has been previously charged.
4. Electrostatic discharge pulse (ESD pulse) approximating a pulse of a machine or mechanical equipment.
5. Corporate STMicroelectronics procedure number 0018695.

Table 3. Operating conditions

Symbol	Parameter	Value	Unit
V_{CC}	Supply voltage	2.3 to 5.5	V
f_{audio}	Audio frequency range	20 to 20,000	Hz
$f_{carrier}$	Carrier frequency range	0.4 to 11	MHz

3 Electrical characteristics

Table 4. V_{CC} = 2.7V, T_{amb} = 25°C, f_{audio} = 1kHz, $f_{carrier}$ = 2.8MHz, frequency deviation = +/-75kHz (unless otherwise specified)

Symbol	Parameter	Test conditions	Min	Typ	Max	Unit
Overall circuit (referring to typical application schematic, without reject filters)						
I_{CC_OX}	Current consumption RX1 is on, RX2 is on	SBY1 = 'Low' SBY2 = X (X = position is irrelevant)		15	18	mA
I_{CC_10}	Current consumption RX1 is on, RX2 is off RX1 audio buffer is on RX2 audio buffer is on	SBY1 = 'High' SBY2 = 'Low'		11	13	mA
I_{CC_11}	Current consumption RX1 is on, RX2 is off RX1 audio buffer is on RX2 audio buffer is off	SBY1 = 'High' SBY2 = 'High'		9.5	11.5	mA
MAUS	Maximum usable average sensitivity	With audio SINAD=12dB, audio BW=30kHz With audio SINAD=26dB, audio BW=30kHz		4 19		μV_{RMS}
SN_{OUT}	Output audio signal to noise ratio	$V_{carrier}$ = 1mV_{RMS}, with psophometric filter		58		dB
V_i	Input limiting voltage	Output S/N reduced by 3dB, in BW = 30kHz Output S/N reduced by 3dB, psophometric filter		80 60		μV_{RMS}
THD	Total harmonic distortion	$V_{carrier}$ = 1mV_{RMS}, with psophometric filter		0.6		%
Low noise amplifier (LNA) section						
G_{LNA}	LNA voltage gain	Z_L= 2kΩ, $f_{carrier}$ = 2.8MHz	18	22	28	dB
BW_{LNA}	-3dB LNA bandwidth	Z_L = 2kΩ		20		MHz
E_{n_LNA}	Equivalent input noise voltage	Rs = 0Ω		3.4		nV/√Hz
I_{n_LNA}	Equivalent input noise current	Rs = 0Ω		0.6		pA/√Hz
Z_{LNA_IN}	Input impedance defined as R_{LNA_IN} in parallel with C_{LNA_IN}	R_{LNA_IN} C_{LNA_IN}		30 2		kΩ pF
Z_{LNA_OUT}	Output impedance			200		Ω
P_{1dB_LNA}	1dB compression point	Z_L= 2kΩ Z_L= 2kΩ, $f_{carrier}$= 2.8MHz		127 95		mV_{RMS}
$IIP3_{LNA}$	Input 3rd order interception point	Z_L= 2kΩ Z_L= 2kΩ, $f_{carrier}$= 2.8MHz		30 22		mV_{RMS}
Amplifier (AMP) section						
G_{AMP}	Amplifier voltage gain	Z_L=2kΩ, $f_{carrier}$= 2.8MHz	16	20		dB

Table 4. V_{CC} = 2.7V, T_{amb} = 25°C, f_{audio} = 1kHz, $f_{carrier}$ = 2.8MHz, frequency deviation = +/-75kHz (unless otherwise specified) (continued)

Symbol	Parameter	Test conditions	Min	Typ	Max	Unit
Z_{AMP_IN}	Input impedance defined as R_{AMP_IN} in parallel with C_{AMP_IN}	R_{AMP_IN} C_{AMP_IN}		10 2		kΩ pF
Z_{AMP_OUT}	Output impedance			350		Ω
P_{1dBAMP}	1dB compression point	Z_L = 2kΩ Z_L = 2kΩ $f_{carrier}$= 2.8MHz		560 250		mV_{RMS}
BW_{AMP}	-3dB AMP bandwidth	Z_L = 2kΩ		11		MHz
Limiter (LIM) section						
G_{LIM}	Voltage gain	Z_L= 15kΩ tied to GND	50	54	60	dB
Z_{LIM_IN}	Input impedance defined as R_{LIM_IN} in parallel with C_{LIM_IN}	R_{LIM_IN} C_{LIM_IN}		15 2		kΩ pF
V_{LIM_OUT}	Output voltage	Z_L = 15kΩ tied to GND		170		mV_{pp}
FM demodulator section						
V_{DEM}	Output voltage	+-75kHz FM deviation typical application schematic, Z_L = 4kΩ	700	800	900	mV_{RMS}
Z_{DEM_OUT}	Output impedance			100		Ω
Squelch section						
ATT	Audio attenuation on each receiver when audio buffers are muted.	RX1 and RX2 audio buffers muted, Z_L = 16Ω on both audio buffers	55	65		dB
Z_{N_IN}	Noise amplifier input impedance			2		kΩ
V_{N_TH}	Comparator threshold	from **muted** to **unmuted** state R_{mute} = 22kΩ, f_{IN} = 100kHz		9		mV_{RMS}
V_{N_HYS}	Comparator hysteresis	R_{mute} = 22kΩ, f_{IN} = 100kHz		1		mV_{RMS}
I_{mute_sink}	Current sinks on pin 25 to discharge C_{mute} capacitor: ramp generator controlling the attenuation from ON to OFF states of audio buffers.	Voltage on pin 25 = 1.7V		24		µA
I_{mute_source}	Current sources on pin 25 to charge C_{mute} capacitor: ramp generator controlling the attenuation from OFF to ON states of audio buffers.	Voltage on pin 25 = 1.7V		14		µA
Audio buffers						
$Z_{OD\text{-}IN}$	Input impedance			200		kΩ
BW_{1dB}	-1dB bandwidth	Z_L = 16Ω		35		kHz
P_{OUT_OD}	Output power	Z_L= 16Ω, V_{OD_IN}=70mV_{RMS}	15	20		mW
THD_{OD}	Distortion in line driver mode	V_{out} = 0.5 V_{RMS}, Z_L= 10kΩ		0.2	0.3	%

Table 4. V_{CC} = 2.7V, T_{amb} = 25°C, f_{audio} = 1kHz, $f_{carrier}$ = 2.8MHz, frequency deviation = +/-75kHz (unless otherwise specified) (continued)

Symbol	Parameter	Test conditions	Min	Typ	Max	Unit
THD_{OD}	Distortion in power amplifier mode	With decoupling capacitor CDEC = 1µF/ceramic on pin 28, P_{out} = 20 mW, Z_L = 16Ω		0.35	0.8	%
V_{ISOL}	Crosstalk: isolation between the two audio buffers	P_{out} = 20 mW, Z_L = 16Ω		51		dB
Standby						
V_{STBY_L}	Low level input voltage of Standby inputs (Pins 31 and 32)				$0.1xV_{CC}$	V
V_{STBY_H}	High level input voltage of Standby inputs (Pins 31 and 32)		$0.9xV_{CC}$			V
T_{ON}	Turn-on time from Standby mode to Active mode			0.5		µs
T_{OFF}	Turn-off time from Active mode to Standby mode			0.5		µs

4 Overall circuit performance

Figure 2. Supply current vs. supply voltage

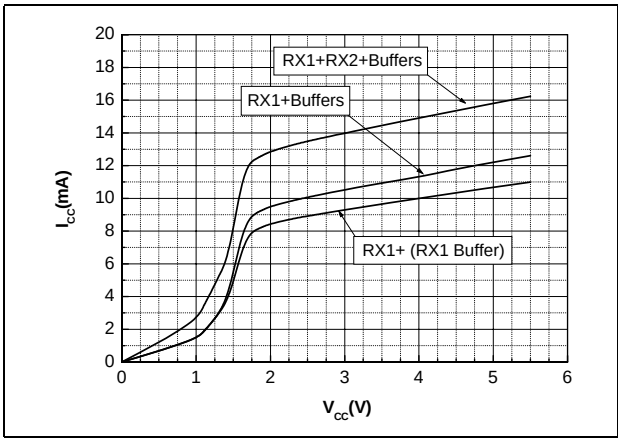

Figure 3. Squelch threshold vs. R_{MUTE} input resistor

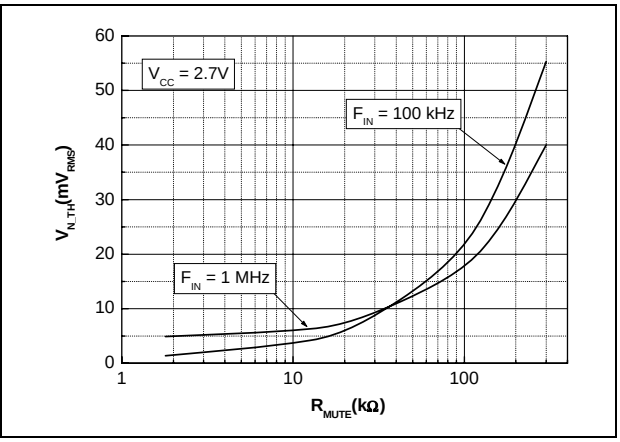

Figure 4. S/N vs. 2.8 MHz input level

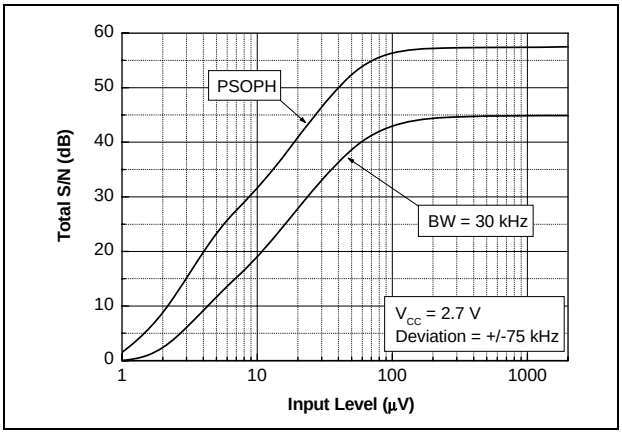

Note: PSOPH: Signal on Noise Ratio curve measured with a CCITT standard psophometric bandpass characteristic. It approximates the response of human hearing.

Figure 5. Supply current vs. temperature

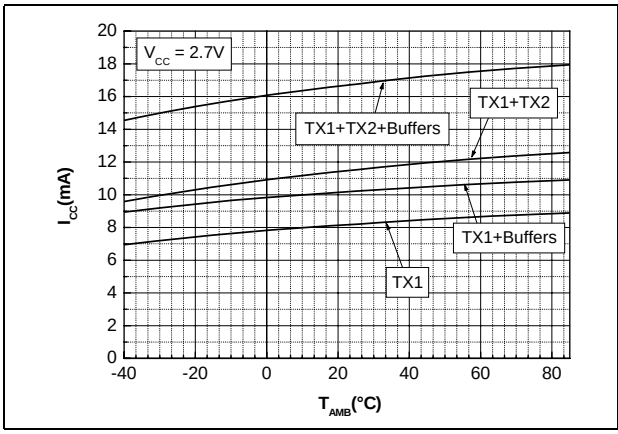

Figure 6. Sensitivity vs. supply voltage

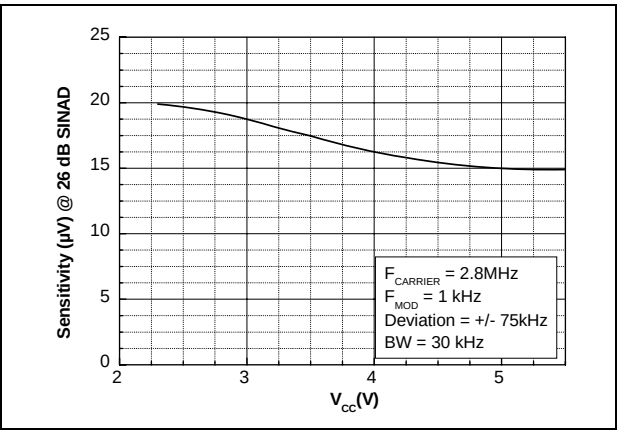

5 Audio buffer performance

Figure 7. Output THD+N vs. output power (R_L = 16Ω)

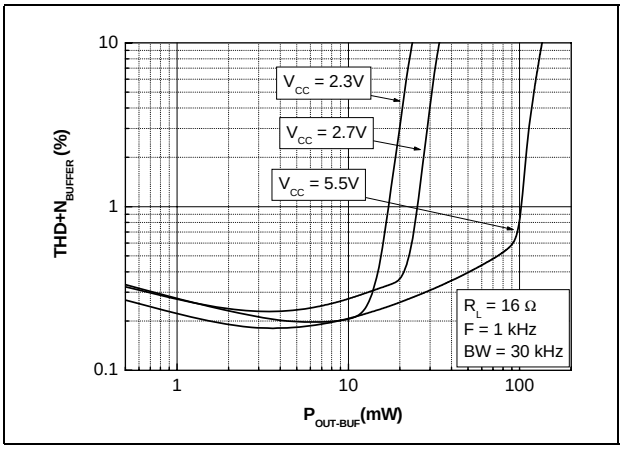

Figure 8. Output THD+N vs. output power (R_L = 16Ω)

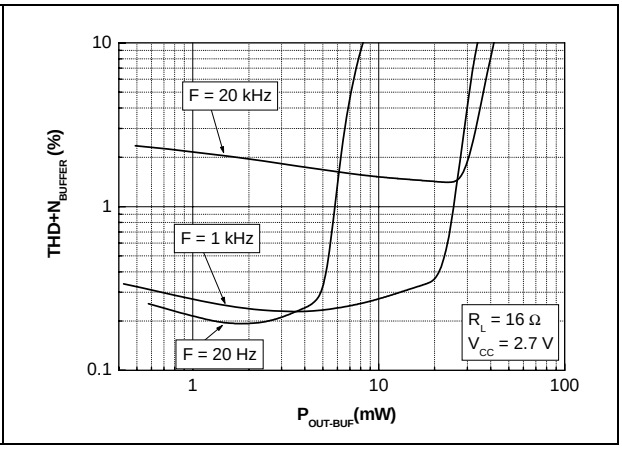

Figure 9. Output THD+N vs. output power (R_L = 32Ω)

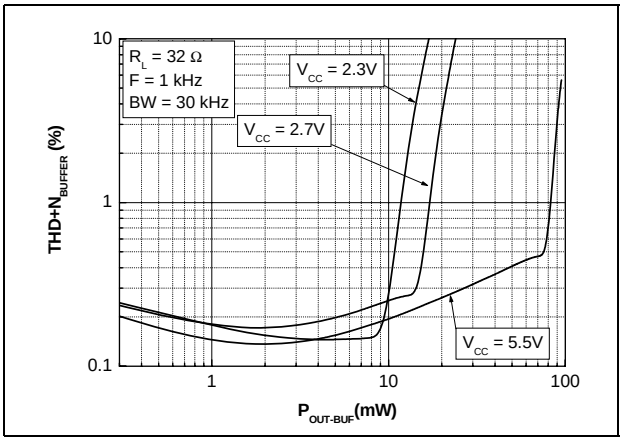

Figure 10. Output THD+N vs. output power (R_L = 32Ω)

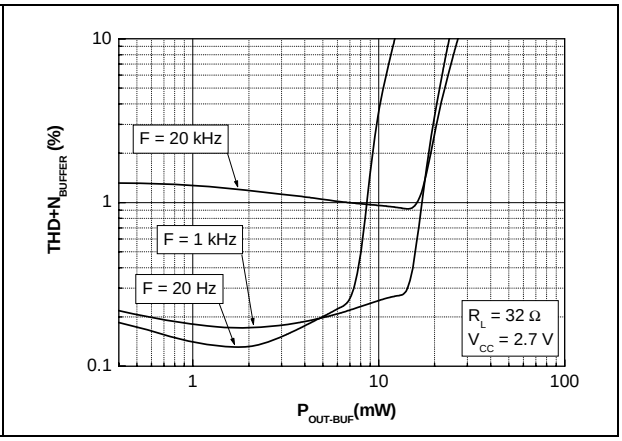

Figure 11. Output THD+N vs. output power (R_L = 600Ω)

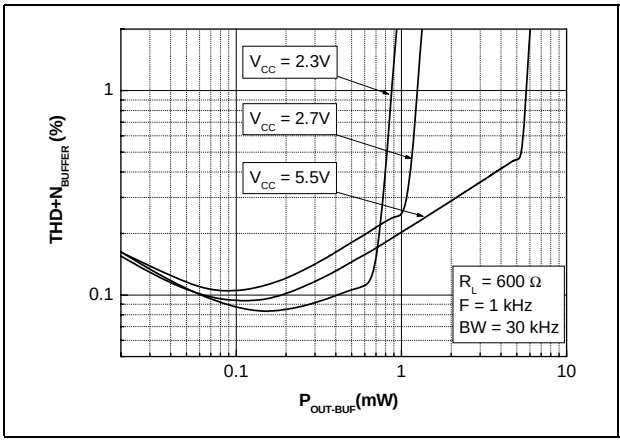

Figure 12. Output THD+N vs. output power (R_L = 600Ω)

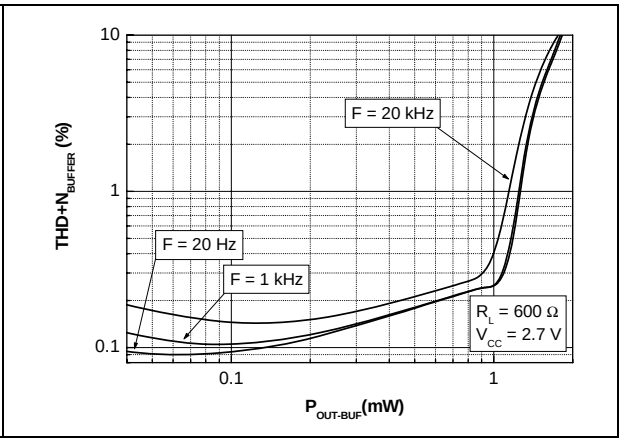

Figure 13. Output THD+N vs. output voltage (R_L = 10kΩ)

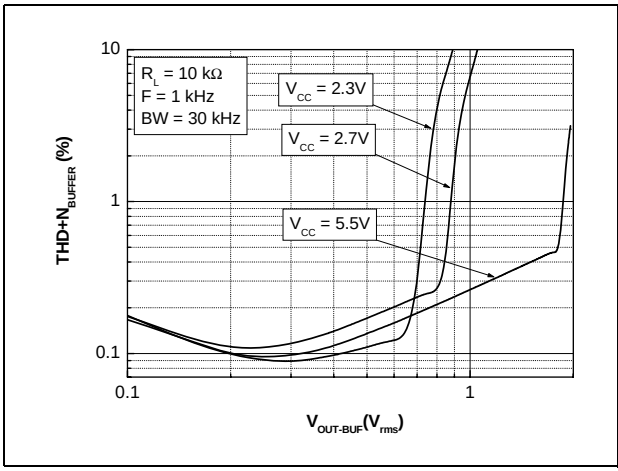

Figure 14. Output THD+N vs. output voltage (R_L = 10kΩ)

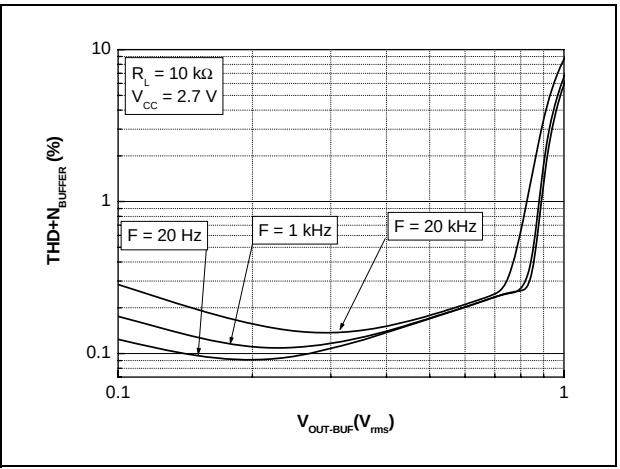

Figure 15. Output THD+N vs. frequency (R_L = 16Ω)

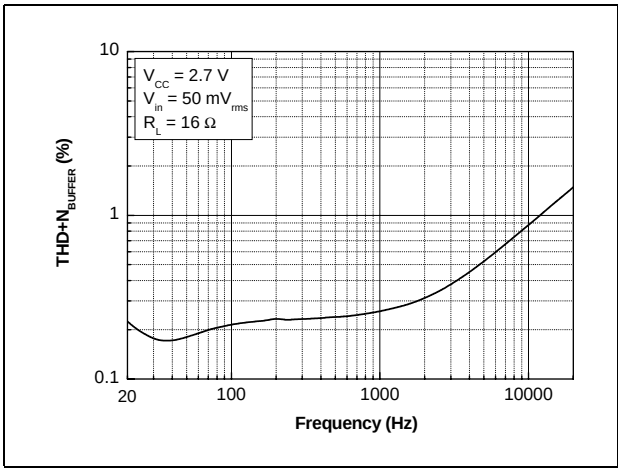

Figure 16. Output THD+N vs. frequency (R_L = 32Ω)

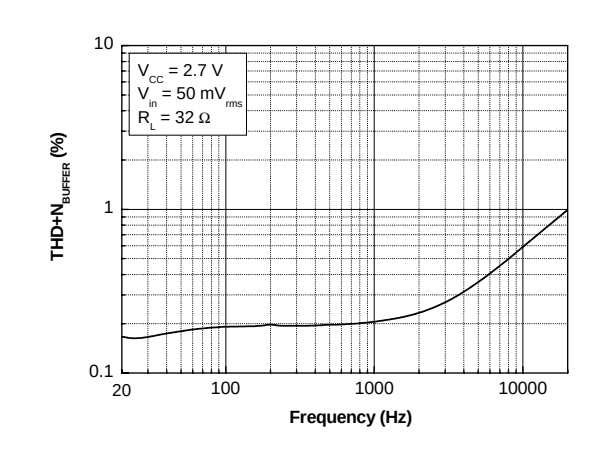

Figure 17. Output THD+N vs. frequency (R_L = 600Ω)

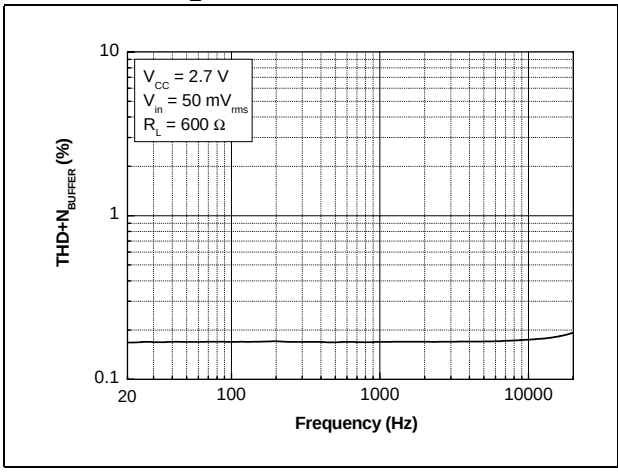

Figure 18. Output THD+N vs. frequency (R_L = 10kΩ)

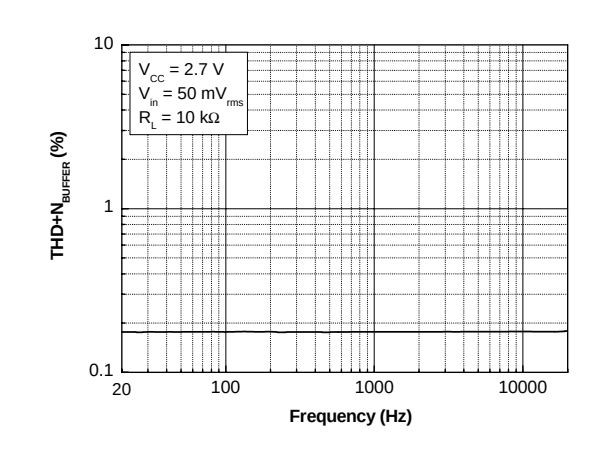

Figure 19. Output power vs. temperature

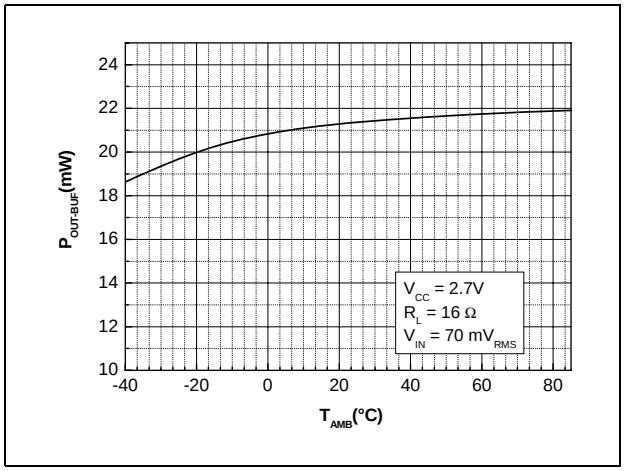

6 Typical application schematics

Figure 20 shows a typical layout for the stereo infrared receiver.

Figure 20. Stereo infrared receiver

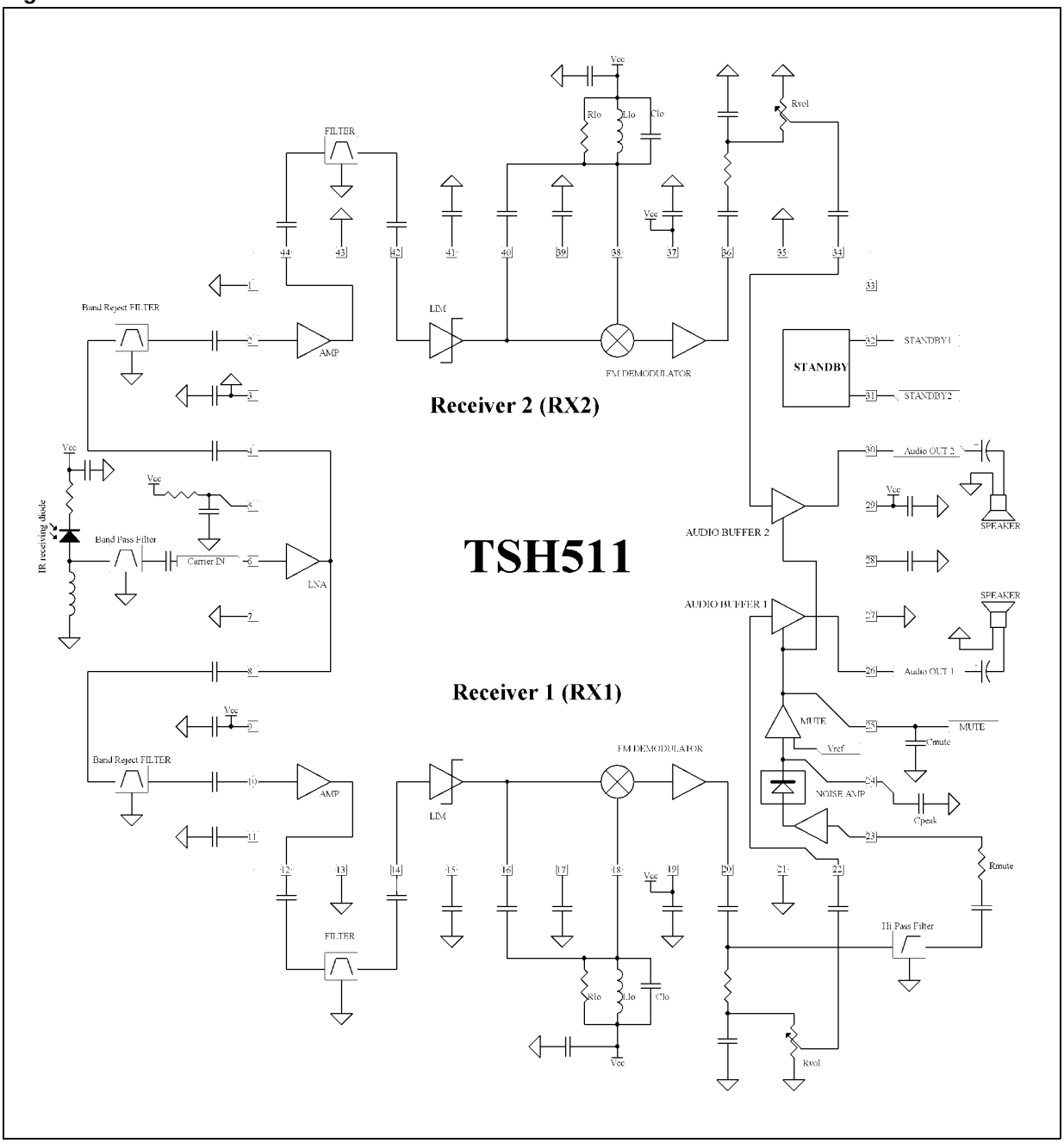

7 Application information

This section provides application information for some typical applications.

7.1 Infrared stereo headphone application

The right side of *Figure 21* shows the block diagram of an infrared stereo receiver using the TSH511. The sensitive LNA, directly connected to the photo diode, does not require an external pre-amplifier. After filtering, the amplified signals are limited and demodulated with quadrature demodulators. The two integrated audio buffers directly drive the stereo headphones. The audio power reaches 2x20mW in two 16Ω loads. The built-in squelch function fades out the audio when the incoming infrared signal is low. The standby inputs SBY1 and SBY2 enable only one receiver for the mono applications.

Figure 21. Hi-fi stereo headphone block diagram

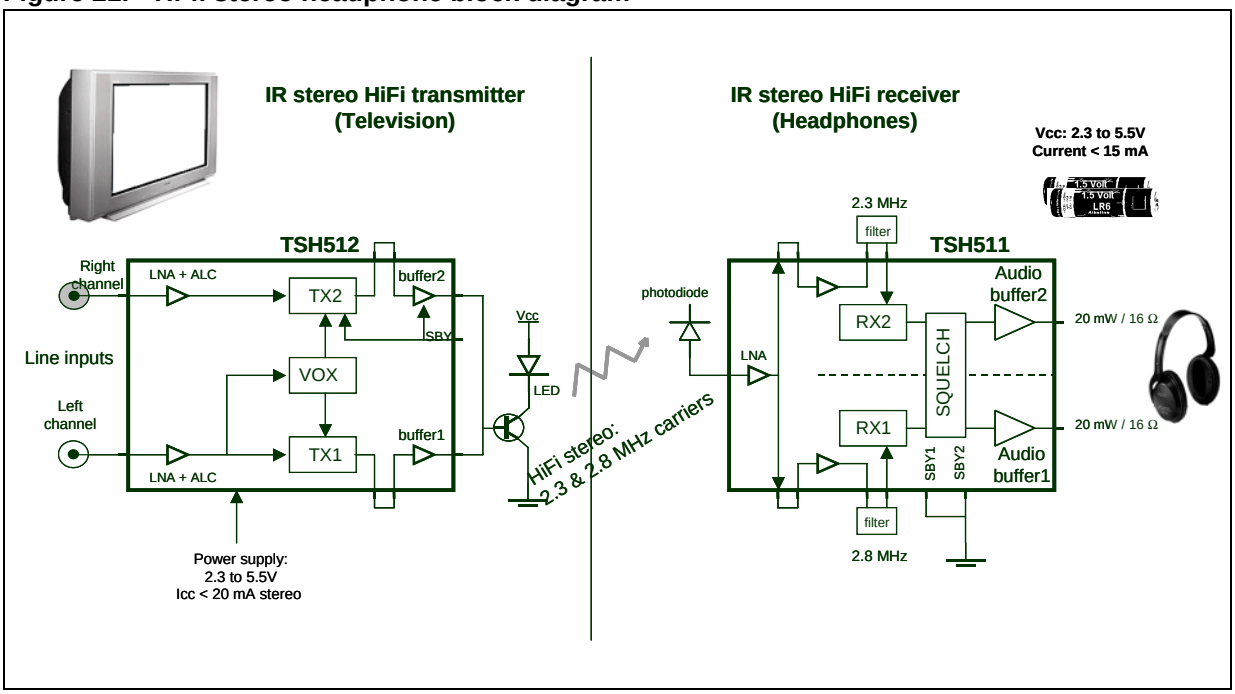

The infrared carriers are detected by the photo diode and the signal is directly amplified by the TSH511. Each receiver has a standard bandpass filter (filters F1 & F2) to select the 2.3MHz and 2.8MHz carriers. After the FM demodulators, the potentiometer P1 controls the volume levels. The stereo headphones are directly connected to the integrated audio buffers. The potentiometer P2 allows adjustment of the sensitivity of the Squelch. The Squelch function fades in and fades out the audio signal, depending on the level of the 2.8MHz carrier.

Figure 22. Stereo headphone application diagram

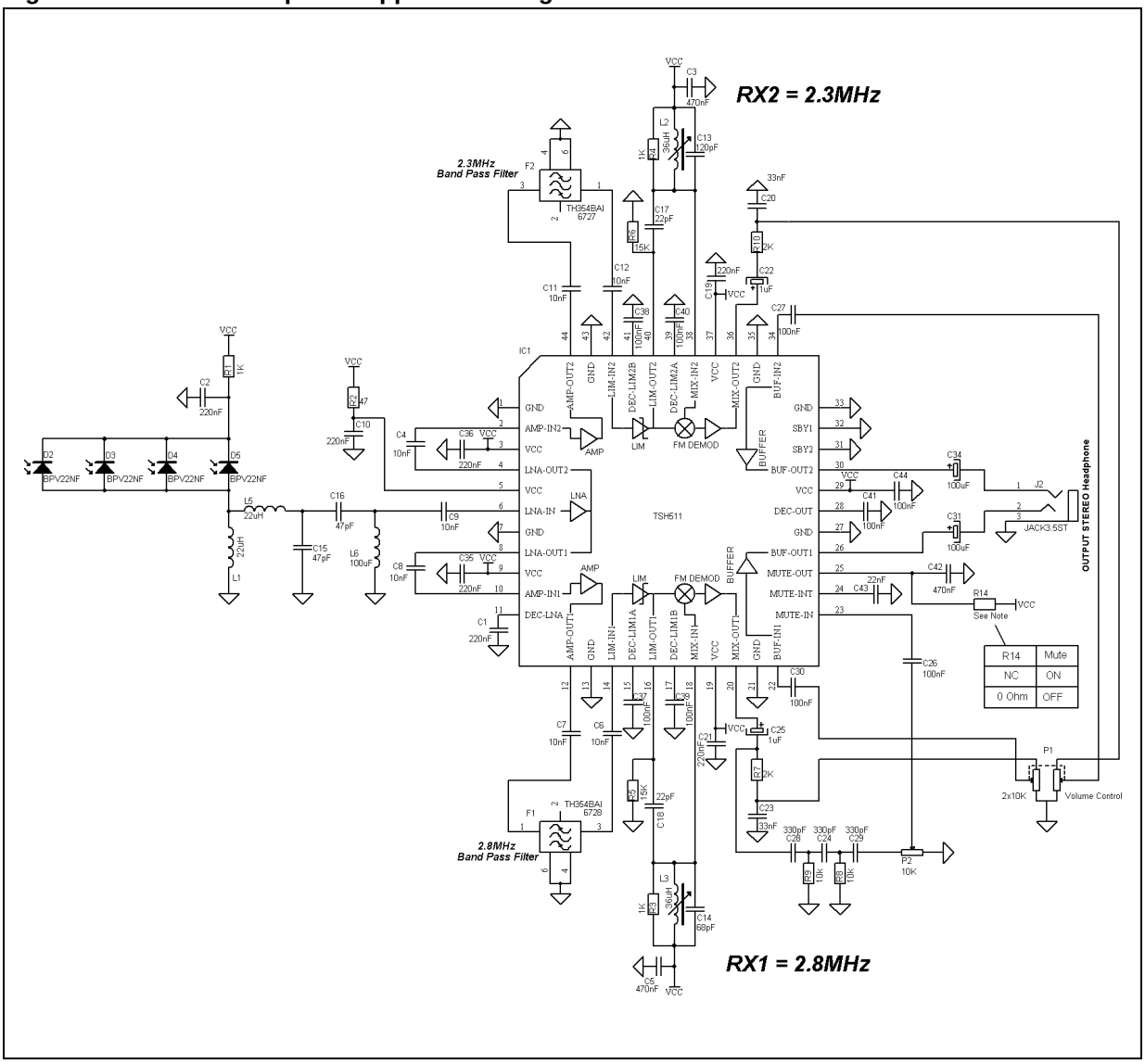

7.2 Multimedia application

Headset side

As shown in *Figure 23*, the TSH511 receives the hi-fi stereo sound from the computer through 2.3MHz and 2.8MHz stereo infrared carriers. The access pins to the RF amplifiers allow the use of a 1.7MHz reject filter to cancel the transmitted signal of the microphone. The wide supply range (2.3V to 5.5V) allows battery operation.

Figure 23. Headset side block diagram

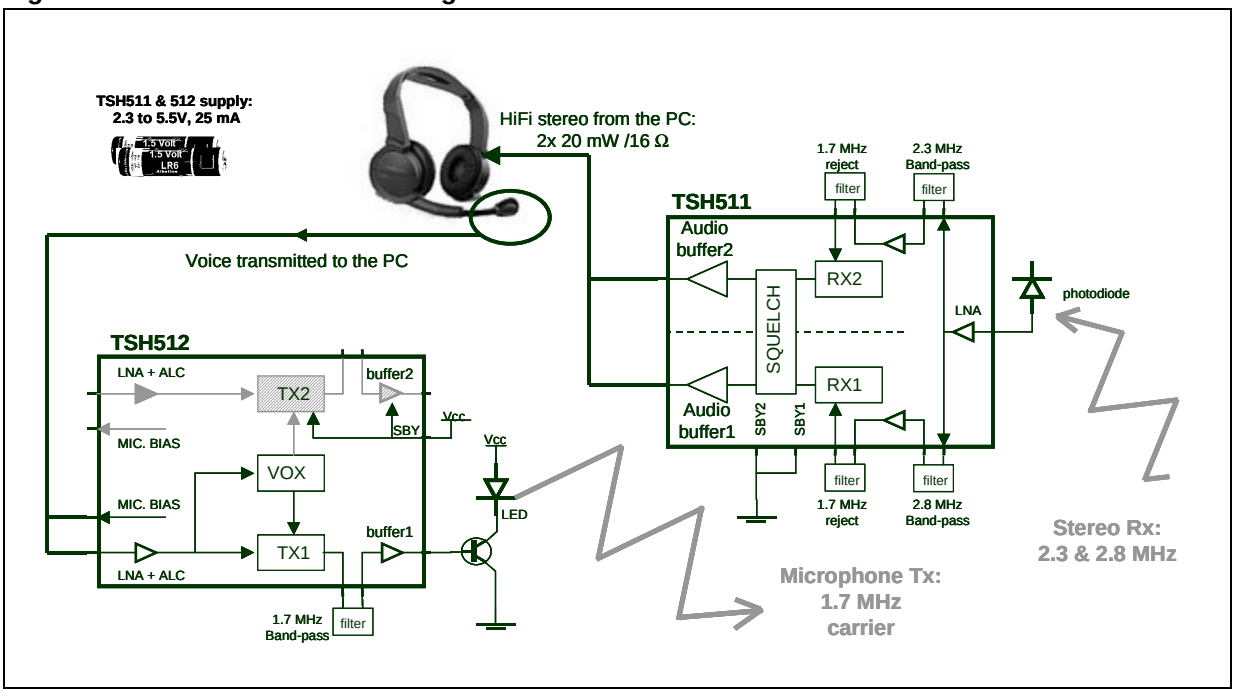

Computer side

In multimedia applications, the TSH511 receives the voice of the user through the 1.7MHz infrared carrier. The standby pins can disable the unused receiver and audio amplifier to reduce the supply current (see *Figure 24*).

Figure 24. Computer side block diagram

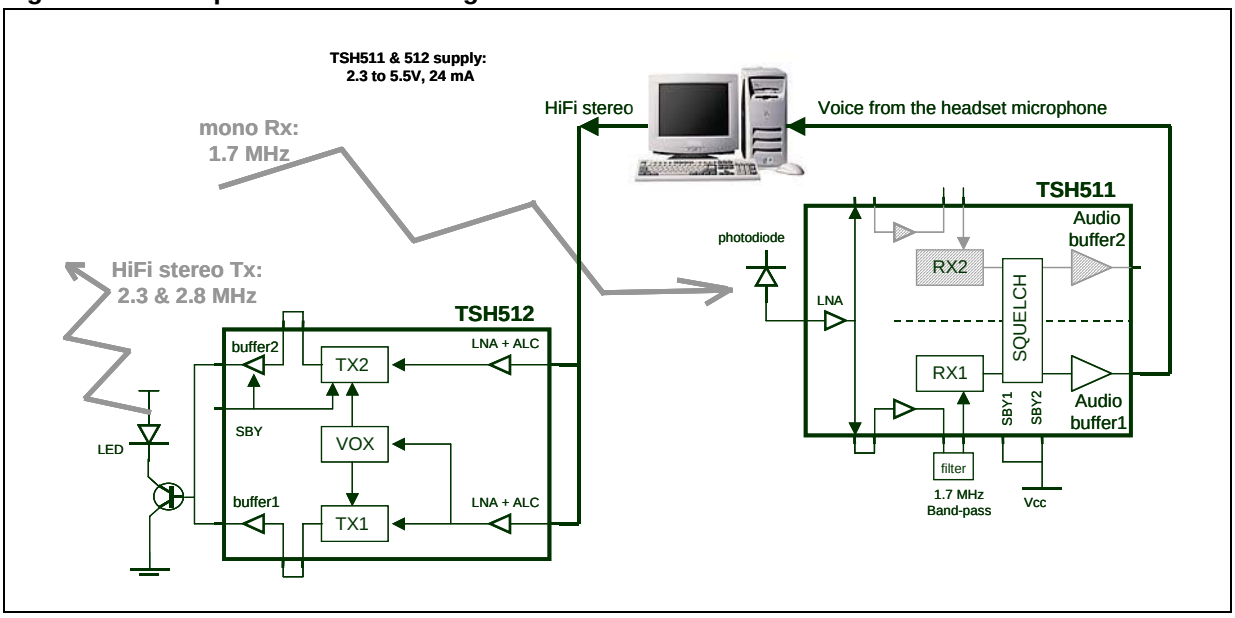

8 General description

The TSH511 is a 0.4MHz to 11MHz dual FM analog receiver. The incoming signal is amplified with a 22dB low noise amplifier (LNA) section. The good noise performance of the LNA allows the photo diode for infrared applications to be connected directly to the TSH511 without any external preamplifier. The access pins for each section and the two standby configurations offer high versatility for many applications: hi-fi stereo infrared receiver, mono/stereo subcarrier receiver, power line carrier audio.

Figure 25. TSH511 block diagram

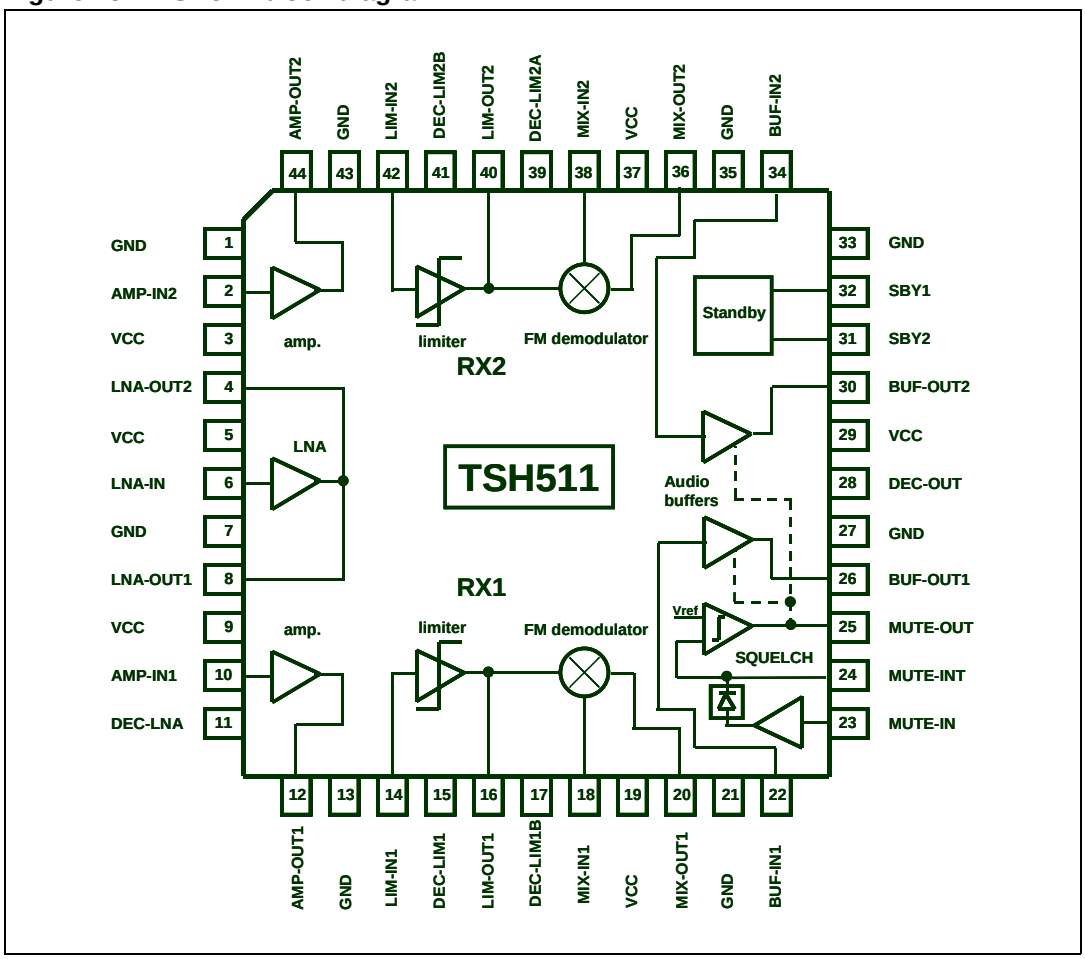

The LNA is common to both receivers but the output is split in two: one for each receiver. Each LNA output can be connected to a first optional filter for bandpass or reject filtering.

The filtered signal is amplified with an intermediate amplifier (AMP) section followed by a second filter. The AMP sections have 20dB typical gain.

Finally, the signal is amplified and limited in the limiter (LIM) section. The 60dB amplifier-limiter LIM provides a constant amplitude signal to the demodulator. It reduces AM parasitic demodulation in the FM demodulator.

The FM demodulator is a classic quadrature detector that uses an external tank.

The demodulated signal can be amplified by the audio buffer section after de-emphasis. Each audio buffer can drive a 16Ω headphone with 20mW power.

The two standby pins SBY1 & SBY2 allow the second receiver RX2 to be put into standby for mono operation. In mono mode, it is possible to use both audio buffers or only one depending on the combination on SBY1 & SBY2.

To avoid noise at the audio output, a squelch section mutes the audio buffers when no carrier is received. The squelch section uses the demodulated signal of the first receiver (RX1). This signal is high-pass filtered, rectified and compared to a threshold to produce the Mute signal (pin 25). When no carrier is received on RX1, the wideband 'FM noise' on the demodulator increases and the Mute signal mutes both audio buffers. When the carrier is present, the wideband noise on the demodulator output decreases, enabling the audio buffer.

Table 5. Infrared audio frequencies

IR frequency in MHz	Applications
1.6	AM mono
1.7	FM mono
2.3	FM right channel
2.8	FM left channel or mono

8.1 LNA section: low noise amplifier

The low noise amplifier (LNA) has a typical gain of 22dB to amplify the incoming RF signal from the photo diode. The LNA is common to both receiver sections RX1 and RX2.

Figure 26. LNA schematics

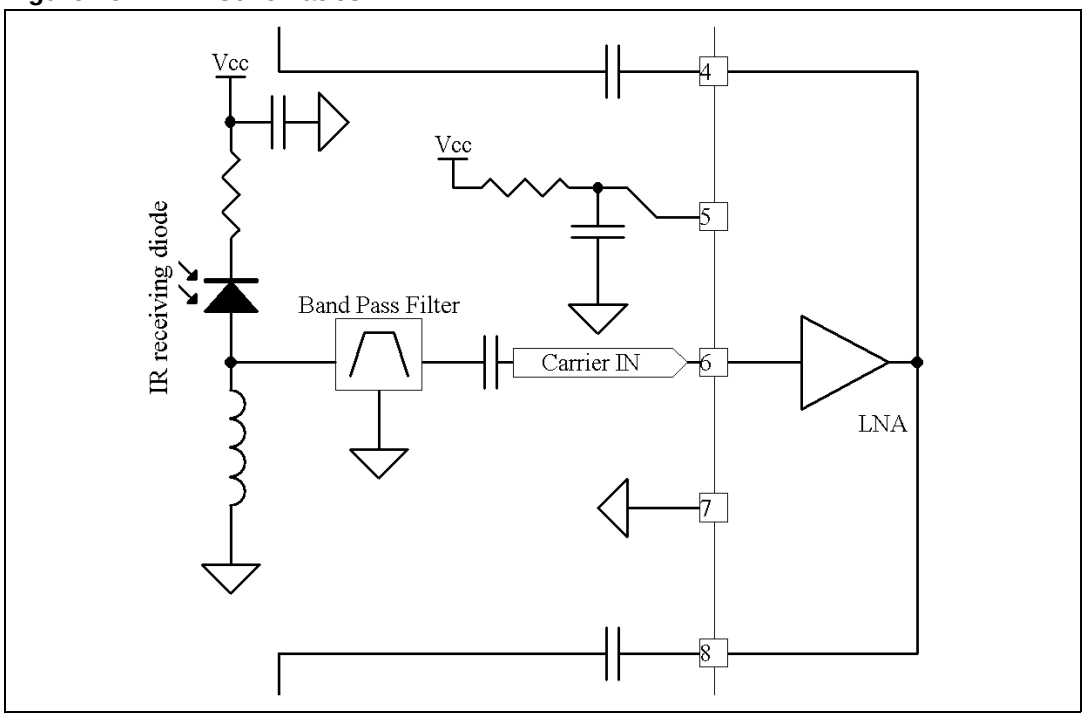

The LNA output is directly connected to LNA-OUT1 and LNA-OUT2 pins in parallel (pin 8 and 4 respectively). Because the LNA minimum impedance load is 1kΩ, the load impedance on each pin LNA-OUT1 or LNA-OUT2 must be 2kΩ minimum.

The series 50Ω resistor and the 100nF capacitor decouple the LNA supply voltage (pin 5), thus improving noise performance.

8.2 AMP and LIM sections: amplifier and limiter

The first filter output is connected to the intermediate amplifier AMP. The gain of AMP is typically 20dB. The second filter is connected between the output of AMP and the input of the limiter LIM. The 60dB limiter LIM provides a constant amplitude signal to the FM demodulator. It reduces the AM parasitic effects into the FM demodulator.

Figure 27. AMP and LIM schematics

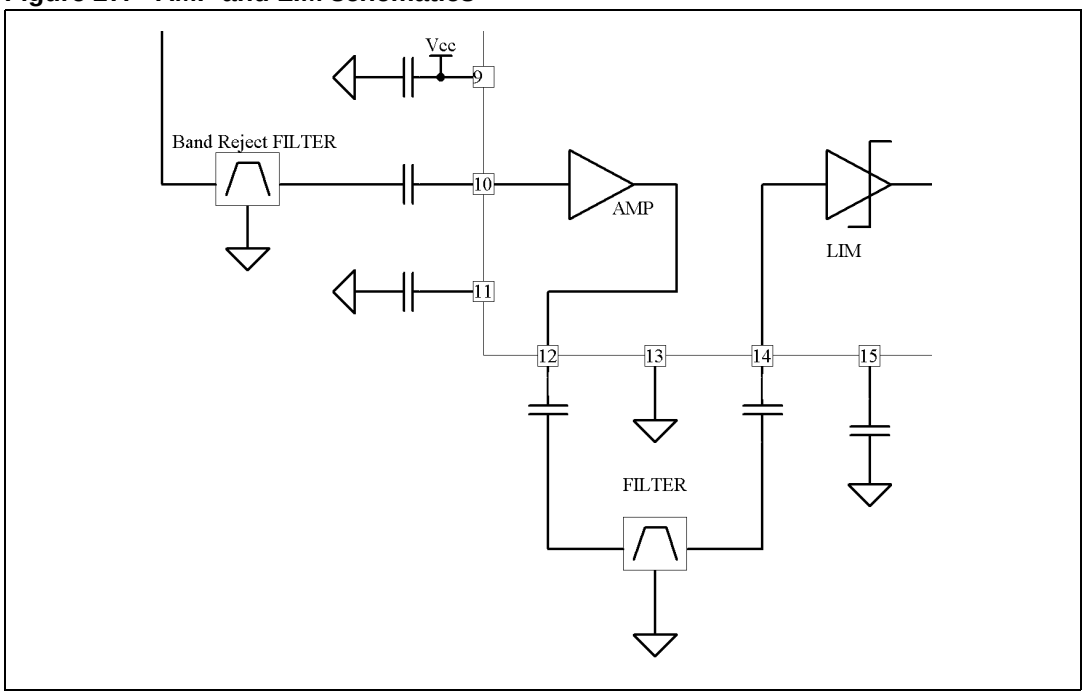

8.3 FM demodulator section

The FM demodulator is a classic quadrature demodulator based on a multiplier. The quadrature is performed with the tank circuit L_{lo} inductor and C_{lo} capacitor. The tank circuit is tuned on the receiving frequency.

The R_{lo} resistor is connected in parallel with L_{lo} and C_{lo} to reduce the Q factor of the tank circuit. It allows to adjust the demodulation characteristics. For a given transmitting deviation, a lower value of R_{lo} gives a lower demodulated amplitude and reduces the distortion.

The AC amplitude on pin 18 must not exceed $300mV_{RMS}$ to prevent clipping by the internal ESD diodes of the circuit.

The low output impedance of the demodulator (MIX-OUT pins) drives the external volume control and the de-emphasis filter.

Figure 28. FM demodulator schematics

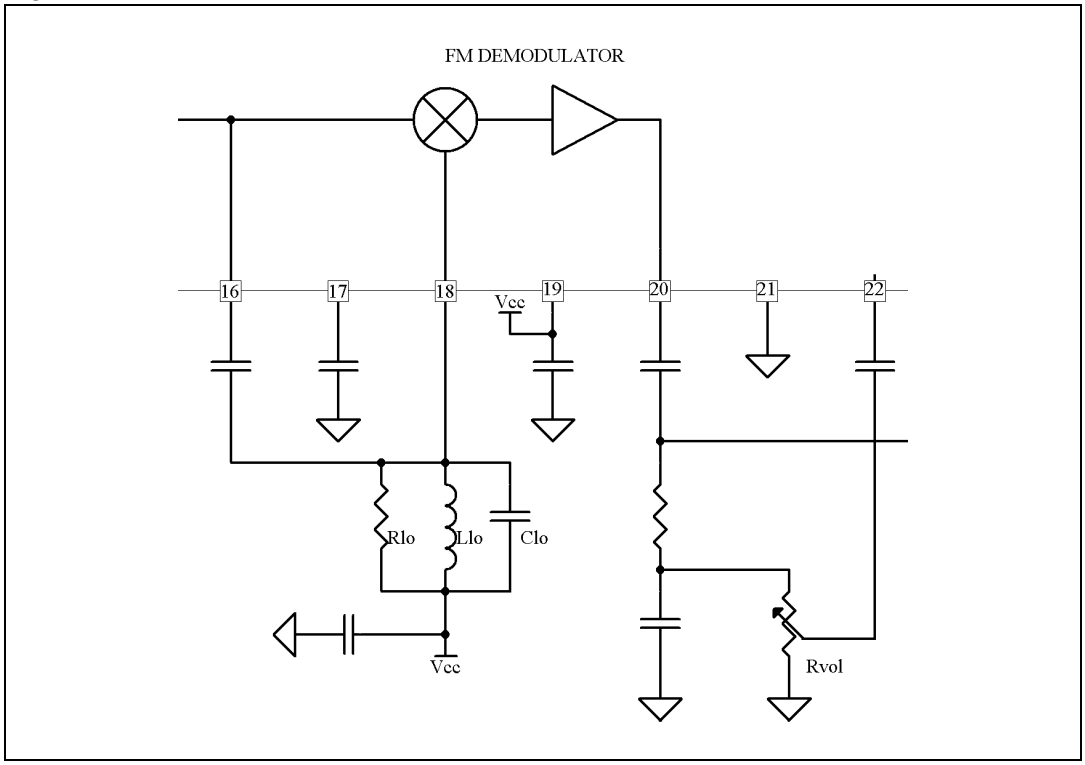

8.4 Squelch section

To avoid audio FM noise at the speakers when no carrier is received, the TSH511 has a built-in squelch circuit. The squelch detects the wideband FM noise on the demodulated output and fades out the audio of both audio buffers.

The audio is filtered from the FM noise using the high-pass RC filter. The cut-off frequency is typically 100kHz. The squelch level depends on the value of the R_{MUTE} resistor in series with the input pin of the noise amplifier MUTE-IN (pin 23). The detected noise is integrated with the C_{peak} capacitor connected to MUTE-INT pin. The DC voltage on this pin follows the amplitude of the noise.

The comparator and the C_{MUTE} capacitor generate the fade-in and fade-out control ramps for the audio buffers. The squelch was designed with particular attention to avoid audio pop-noise.

Figure 29. Squelch schematics

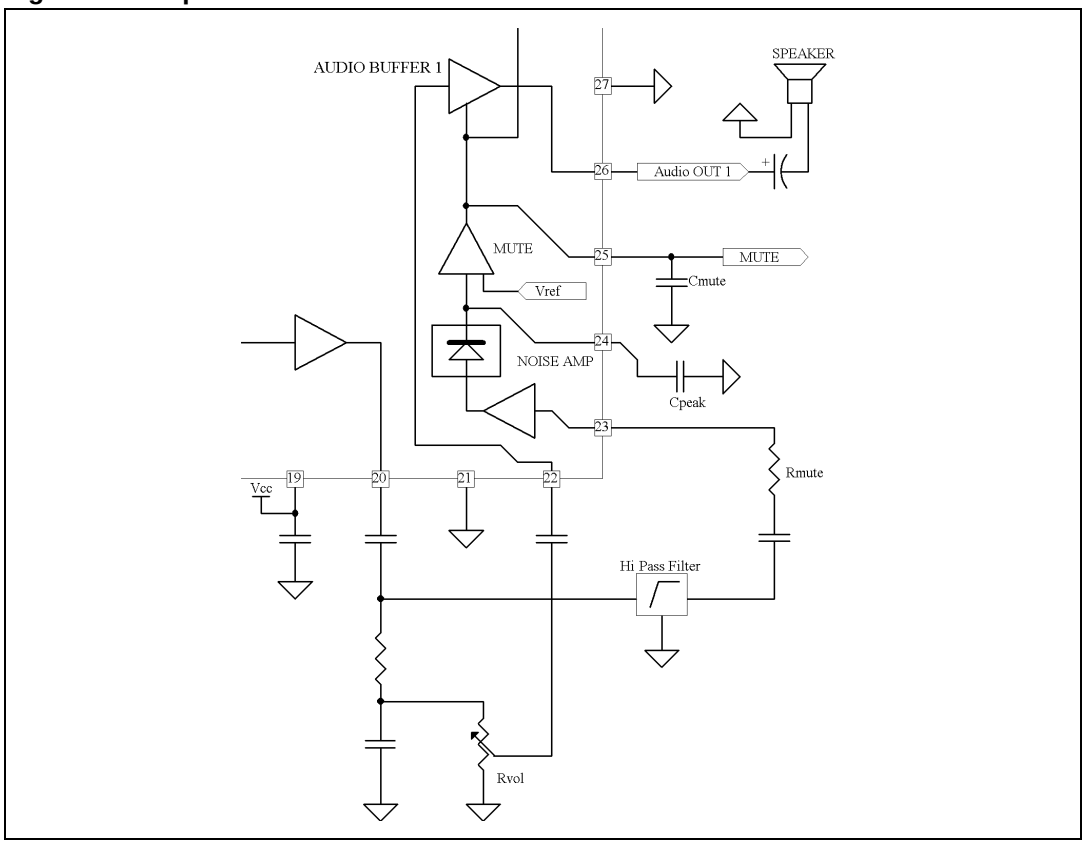

The squelch section is driven by the receiver RX1 but controls both audio buffers.

8.5 Audio buffer sections

The audio signal from an FM demodulator enters into the 6dB/octave low-pass filter for de-emphasis. 50µs and 75µs are standard de-emphasis values.

After the de-emphasis network, the potentiometer controls the volume.

The rail-to-rail output stage of each audio buffer is able to drive 20mW into 16Ω at 2.3V supply voltage. Under these conditions, the distortion is typically 0.3% before saturation.

The audio buffers can also drive the other usual impedances used in audio: 32Ω, 600Ω and 10kΩ (see the corresponding distortion curves).

The high input impedances of the audio buffers reduce the coupling capacitors to less than 0.1µF allowing space and cost saving.

8.6 Standby section

Depending on the state of the logic inputs SBY1 and SBY2, RX2 and the Audio Buffer 2 can be disabled separately. The TSH511 receiver can adapt to different applications by using the SBY1 & SBY2 standby pins.

Table 6. Standby pin description

SBY1 pin 32	SBY2 pin 31	RX1 & audio buffer1	RX2	Audio buffer 2	Typical use
Low	Low	ON	ON	ON	stereo
Low	High				
High	Low	ON	OFF	ON	mono on the two outputs
High	High	ON	OFF	OFF	mono on one output

In the standard stereo mode, the configuration is: SBY1 = SBY2 = Low.

In mono mode with one load (example: a single load speaker), RX2 and Audio Buffer 2 are disabled, the configuration is SBY1 = SBY2 = High.

In mono mode with a stereo load (for example: a stereo headphone), the configuration is SBY1 = High, SBY2 = Low.

A pin is in High state if connected to V_{CC}, and is in Low state if connected to GND.

9 Package information

In order to meet environmental requirements, STMicroelectronics offers these devices in ECOPACK® packages. These packages have a lead-free second level interconnect. The category of second level interconnect is marked on the package and on the inner box label, in compliance with JEDEC Standard JESD97. The maximum ratings related to soldering conditions are also marked on the inner box label. ECOPACK is an STMicroelectronics trademark. ECOPACK specifications are available at: www.st.com.

Figure 30. TQFP44 package mechanical data

Ref.	Dimensions					
	Millimeters			Inches		
	Min.	Typ.	Max.	Min.	Typ.	Max.
A			1.6			0.063
A1	0.05		0.15	0.002		0.006
A2	1.35	1.40	1.45	0.053	0.055	0.057
B	0.30	0.37	0.45	0.012	0.015	0.018
C	0.09		0.20	0.004		0.008
D	11.80	12	12.20	0.465	0.472	0.480
D1	9.80	10.00	10.20	0.386	0.394	0.402
D3		8.00			0.315	
E	11.80	12.00	12.20	0.465	0.472	0.480
E1	9.80	10.00	10.20	0.386	0.394	0.402
E3		8.00			0.315	
e		0.80			0.031	
L	0.45	0.60	0.75	0.018	0.024	0.030
L1		1.00			0.039	
K	0°	3.5°	7°	0°	3.5°	7°

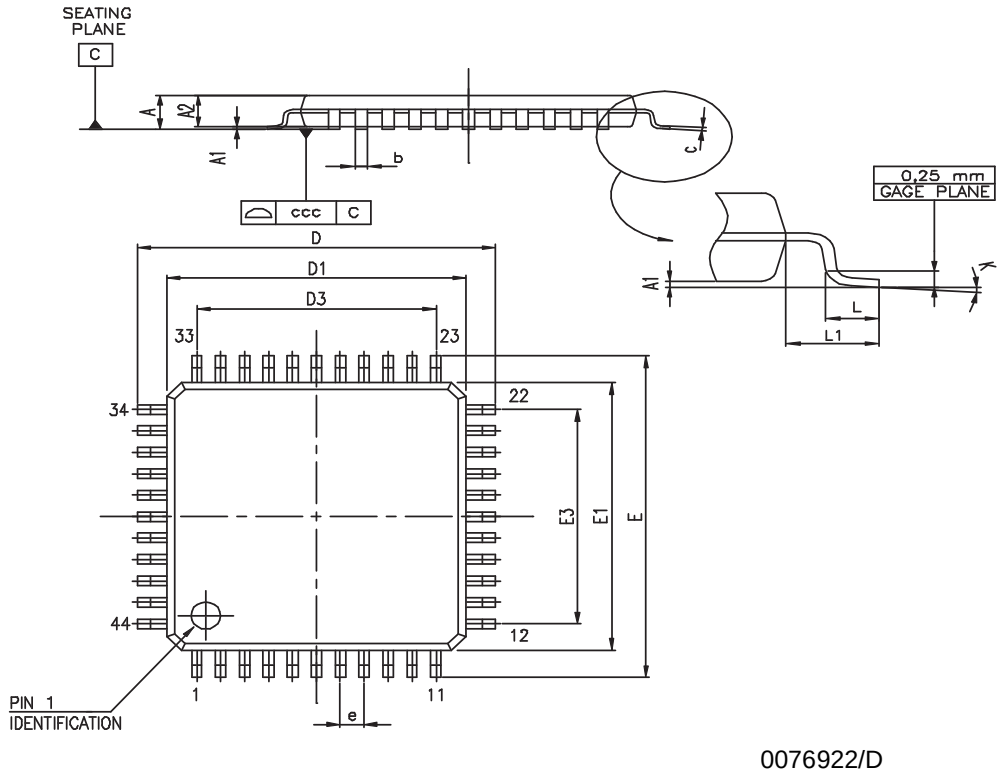

10 Ordering information

Table 7. Order codes

Part number	Temperature range	Package	Packaging	Marking
TSH511CF	-40°C to +85°C	TQFP44	Tray	TSH511C
TSH511CFT			Tape & reel	
TSH511CYFT(1)		TQFP44 (Automotive grade)	Tape & reel	TSH511CYF

1. Qualification and characterization according to AEC Q100 and Q003 or equivalent, advanced screening according to AEC Q001 & Q 002 or equivalent are on-going.

11 Revision history

Date	Revision	Changes
01-Aug-2001	1	First release corresponding to Preliminary Data version of datasheet.
01-Dec-2003	2	Datasheet updated for Maturity 30: – Electrical parameters updated – Application diagrams updated – Releases on curves
01-April-2005	3	R_{thja} value added on *Table 2* on page 5
5-Jul-2007	4	Value of $F_{carrier}$ reduced to 2.8MHz in LNA section in *Table 4*. Format update.
12-Nov-2007	5	Added PPAP reference in *Table 7: Order codes*.

Please Read Carefully:

Information in this document is provided solely in connection with ST products. STMicroelectronics NV and its subsidiaries (“ST”) reserve the right to make changes, corrections, modifications or improvements, to this document, and the products and services described herein at any time, without notice.

All ST products are sold pursuant to ST’s terms and conditions of sale.

Purchasers are solely responsible for the choice, selection and use of the ST products and services described herein, and ST assumes no liability whatsoever relating to the choice, selection or use of the ST products and services described herein.

No license, express or implied, by estoppel or otherwise, to any intellectual property rights is granted under this document. If any part of this document refers to any third party products or services it shall not be deemed a license grant by ST for the use of such third party products or services, or any intellectual property contained therein or considered as a warranty covering the use in any manner whatsoever of such third party products or services or any intellectual property contained therein.

UNLESS OTHERWISE SET FORTH IN ST’S TERMS AND CONDITIONS OF SALE ST DISCLAIMS ANY EXPRESS OR IMPLIED WARRANTY WITH RESPECT TO THE USE AND/OR SALE OF ST PRODUCTS INCLUDING WITHOUT LIMITATION IMPLIED WARRANTIES OF MERCHANTABILITY, FITNESS FOR A PARTICULAR PURPOSE (AND THEIR EQUIVALENTS UNDER THE LAWS OF ANY JURISDICTION), OR INFRINGEMENT OF ANY PATENT, COPYRIGHT OR OTHER INTELLECTUAL PROPERTY RIGHT.

UNLESS EXPRESSLY APPROVED IN WRITING BY AN AUTHORIZED ST REPRESENTATIVE, ST PRODUCTS ARE NOT RECOMMENDED, AUTHORIZED OR WARRANTED FOR USE IN MILITARY, AIR CRAFT, SPACE, LIFE SAVING, OR LIFE SUSTAINING APPLICATIONS, NOR IN PRODUCTS OR SYSTEMS WHERE FAILURE OR MALFUNCTION MAY RESULT IN PERSONAL INJURY, DEATH, OR SEVERE PROPERTY OR ENVIRONMENTAL DAMAGE. ST PRODUCTS WHICH ARE NOT SPECIFIED AS "AUTOMOTIVE GRADE" MAY ONLY BE USED IN AUTOMOTIVE APPLICATIONS AT USER’S OWN RISK.

Resale of ST products with provisions different from the statements and/or technical features set forth in this document shall immediately void any warranty granted by ST for the ST product or service described herein and shall not create or extend in any manner whatsoever, any liability of ST.

ST and the ST logo are trademarks or registered trademarks of ST in various countries.

Information in this document supersedes and replaces all information previously supplied.

The ST logo is a registered trademark of STMicroelectronics. All other names are the property of their respective owners.

© 2007 STMicroelectronics - All rights reserved

STMicroelectronics group of companies

Australia - Belgium - Brazil - Canada - China - Czech Republic - Finland - France - Germany - Hong Kong - India - Israel - Italy - Japan - Malaysia - Malta - Morocco - Singapore - Spain - Sweden - Switzerland - United Kingdom - United States of America

www.st.com